LEE INDUSTRIES
Processing Perfection.™

Expanding your food processing operation:

What to know about kettle design and configuration to optimize safety, quality and production.

Once a food processing operation decides to expand production capacity — whether driven by a need to improve efficiency, introduce a new product line, or capitalize on market opportunity — plant executives, managers and process engineers must tackle a long list of decisions.

Because of its impact on both short- and long-term success for the operation, the item at the top of this decision list is often the design, configuration and construction of the mixing, agitation or cooking vessel at the center of the production process. Several factors make this a crucial consideration:

Impact on safety and quality:
No other equipment in your processing operation influences worker and food product safety and your product's quality and consistency as significantly as your production kettles. Your decisions for kettle design, features and construction will have a direct impact on these key performance indicators.

Cost and market risk:
A high-capacity, industrial-grade mixing or cooking kettle is a major capital expense for any food plant. Making the right configuration decisions here will play a major part in meeting plant production goals at the end of the expansion effort, particularly those for production throughput and operating costs.

Service life:
Integrating a production kettle into your process is a long-term proposition. When planning a line or plant expansion, specification decisions are often irreversible, and these early choices can either empower or impair your process during the many years and even decades this equipment will be running in your plant. Robust and solidly designed equipment will provide long-term trouble-free service.

For these reasons, it's critical for plant managers, process engineers, and others involved in purchasing a new production kettle to pay close attention to specification, design, and configuration choices.

Reduce Your Long-Term Operating Costs and Market Risks, and Improve Operator and Food Safety

Plant Resource Planning for Optimizing Expansion: Time, Space and Utilities

When preparing for a line extension, expansion, upgrade or a new line, there are three basic, but very important, initial considerations:

Consider the Impact of Time, Space and Utilities on Your Initial Expansion Decision

Time:
The process of specifying, designing and fabricating a new custom kettle requires multiple months until final delivery to your plant. To avoid delays in getting new production online, provide sufficient lead time in your line expansion or plant upgrade schedule.

Space:
Confirm that there is adequate floor space in your plant for the new kettles, tanks or other vessels. Due to the size of larger vessels, it is also important to check that there is enough entry room in your plant to move the equipment into your facility, sufficient vertical headroom available above the unit during operation, and room to access and service the equipment once in place. Space required for processing piping, utility piping and pumps must also be considered.

Utilities:
When adding a new kettle to a line or building a new line in your plant, verify that your plant's boiler and water systems can generate sufficient steam pressure and cooling water to operate this new equipment.

Impact of Larger Processing Capacity on Your Entire Line Operation

In addition to the above, you must carefully consider the impact of the larger processing capacity on the line operations at both ends of your kettle's batch processes:

Impact on the front end of the line:
Larger kettle capacities and higher vessel production rates may necessitate larger ingredient storage areas, higher capacity and throughput for ingredient preparation and pre-processing stages, and more filling equipment capacity for vessel loading operations.

Impact on the back end of the line:
Higher production rates impact your operation after vessel processing as well, requiring sufficient product pipeline or transport infrastructure, and increased capacity at the end of the line for packaging or container filling, carton loading, storage, and finished product transport.

How Far Can You Expand Your Production Output? The "10X Rule"

When faced with an expansion decision, the first issue, which defines the capacity of the kettle for the required production rate, is the batch production output level for your new line. A general rule of thumb, commonly used in the industry, is that batch processes can be expanded by a maximum of 10 times from the original batch production level with relatively low risk to safety, quality or product consistency. For example, if your current batch production capacity is 100 gallons in a 100-gallon kettle, you could, in many, but not all cases (see below), generally scale your batch process up to a 1,000-gallon kettle.

Other process expansion considerations:
However, there are applications where scaling up to a much larger kettle capacity by as much as 10X can adversely affect product quality. This depends on your product, your process and the nature of the ingredients in your product. For example, some food products, such as soups, salads or pie fillings, use chopped vegetables, beans, fruit, or other solid, chunk-like materials that must remain intact at the end of the cooking and mixing process. If these materials are processed in too large of a kettle, the pressure of the mass at the top of the vessel ("head weight") will crush other ingredients at the bottom of the kettle during the mixing and cooking process.

Additionally, there may be other reasons not to expand as much as 10X in a process with a single kettle. For craft or "homemade"-style operations that rely on individual chefs, who carefully assemble, mix, cook, and monitor each batch, using a series of smaller kettles may provide more consistent results.

In these cases, it may be preferable to split the required production among multiple, smaller-capacity kettles; for example, using two 500-gallon (or four 250-gallon kettles), instead of a single 1,000-gallon kettle. Individual batch operations for these kettles — such as loading, mixing, cooking, and unloading — could be operated simultaneously for all kettles in the line, or operated in series (while one kettle cooks, the other one is being loaded, and a third is being discharged, etc.). Of course, this option depends on your product, your line process, workflow, plant layout, and available personnel and utility resources.

Increasing Food Production: The "10X Rule"

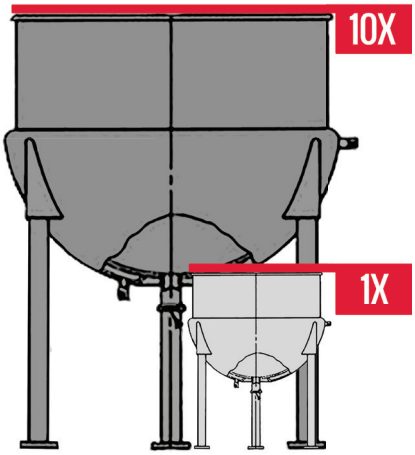

In many cases, a batch production food process can be successfully increased by up to 10 times the original batch capacity.

The 300- to 600-Gallon Range for Kettle Capacity is Often the Ideal Size for Many Food Processing Applications

Balancing Kettle Size and Product Consistency

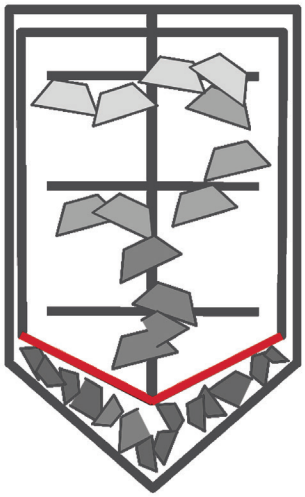

1,000 GAL

100 GAL

Heavier fluid weight in large capacity vessels (such as the cone bottom tank shown above) can crush or damage food products using cut vegetables, fruit or other chunk-like materials. In such applications, smaller capacity kettles yield a better result; and, multiple kettles can be used to meet production requirements.

While food processors with relatively simple products, such as fully mixed sauces (e.g., ketchup or tomato sauce) can successfully use 1,000- or even 2,000-gallon capacity kettles, a 300- to 600-gallon capacity range is generally considered the optimal size. This range provides a good balance between output capacity and consistent quality from batch to batch, and is also ideal for inclined kettles, which are used for mixing thick or highly viscous products requiring a folding or rolling action.

Important Adjustments when Scaling Batch Output to a Larger Capacity Kettle

When scaling up an existing food process from a small to a larger kettle, other complex factors will also impact product quality, consistency and output. Here, two major performance modifications can be made to the larger kettle's operating parameters to produce a final product consistent with the quality produced in the current, smaller kettle:

Adjust the mixing speed:
A larger kettle also means a longer rotation path for the agitator or scraper blades along the outer edge of the agitator. Fine-tuning the rotational speed of these blades at the outer edge of the kettle (also known as its tip speed) can duplicate the mixing action of the smaller kettle.

Calculate heating jacket-to-volume ratio:
To ensure consistent heating and cooling of the batch during production, the size of the heating jacket for the kettle (its jacket-to-volume ratio) must be calculated and specified for the larger kettle.

Both of these kettle design performance specifications can be made either to duplicate the performance of the smaller kettle, or can be modified to shorten production time in the larger kettle (see next section).

Specifications for Optimizing and Accelerating Batch Production Through Optimized Kettle Design

Adding a new kettle to your line, moving up to a larger capacity kettle or replacing an existing unit provide you with the opportunity to consider a range of performance enhancements to the new kettle. Depending on your objectives, these modifications can reduce batch processing time — if careful adjustments are made by experienced design engineers at the kettle manufacturer during the kettle specification process — while also improving safety, product quality and product consistency:

Adding double-motion agitation to speed mixing time:
While many food processors use standard, single-motion agitators in their mixing vessels, switching to a double-motion agitator — where counter-rotating agitator blades move product ingredients more efficiently from the outer surface to the center, and from the bottom to top of the kettle — can significantly reduce mixing times. Double-motion agitation is effective across a range of mixing speeds, from a gentle lifting and folding action (when used on inclined kettles), to fast, highly aggressive mixing, which is especially effective when mixing highly viscous products, or incorporating other hard-to-wet-out ingredients.

Increasing jacketing area to reduce batch cycle time:
Extending the jacketed area around the upper part of the kettle (kettle sidewall) improves heating and cooling rates, substantially reducing batch cycle times. When making these adjustments, heating and cooling times must be carefully calculated to produce consistent results and avoid changing important properties, such as ingredient color or consistency, in the final product.

Preparing for the future:
In addition to optimizing your existing process, it is also important to think of future production needs. For nominal added cost during the specification stage, kettles can be ordered with somewhat larger capacities, increased motor horsepower and agitator ratings can be increased above your current requirements to process a wider variety of products and accommodate future marketing and production opportunities. This approach is especially important for contract manufacturers, who must meet a wide range of often unpredictable requirements when processing new products for their customers.

Double-motion Agitation and Increased Jacket Surface Area Can Significantly Optimize Product Quality and Production

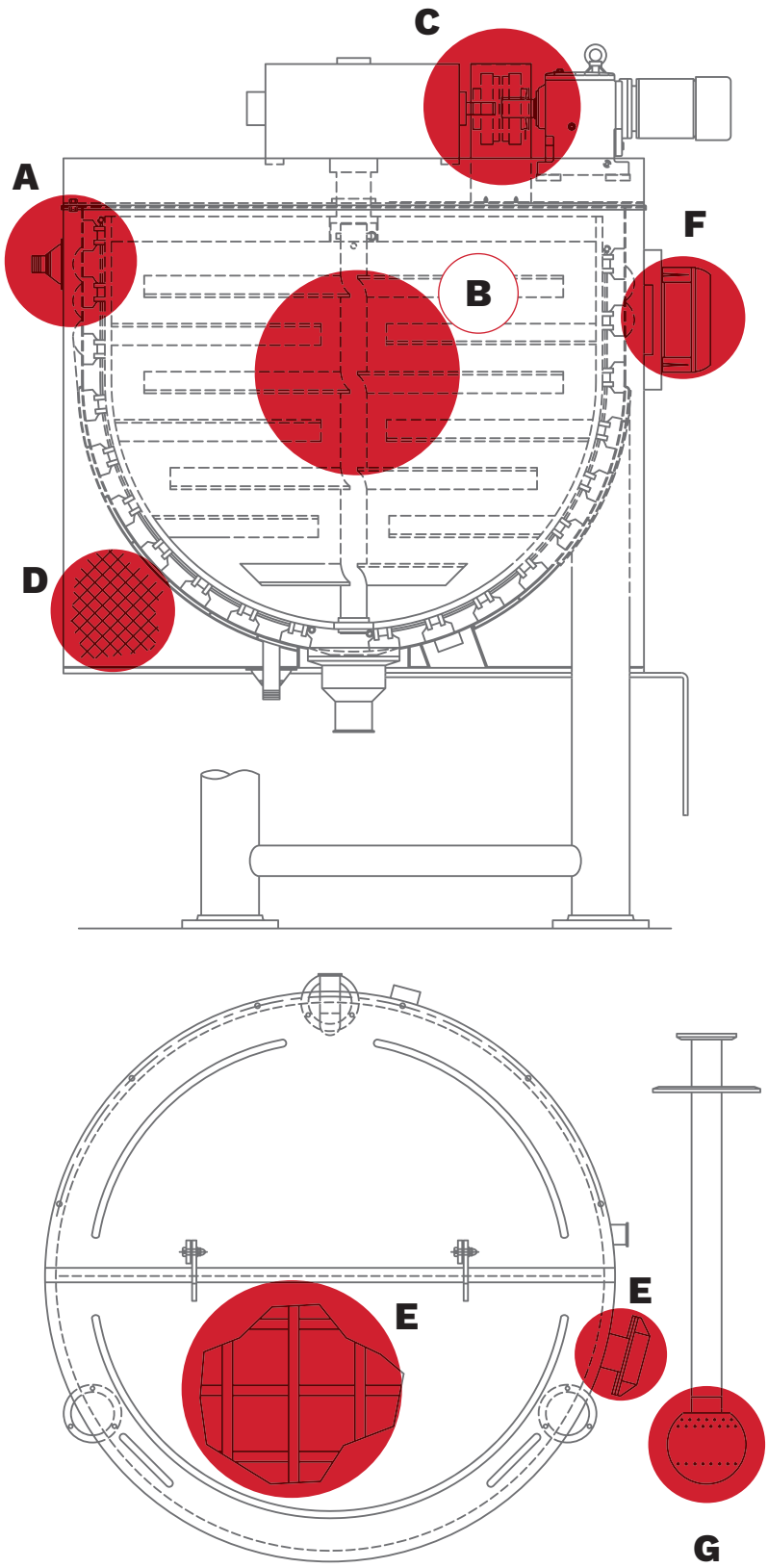

Important Features to Consider When Designing Your Kettle

These critical enhancements to kettles, tanks, and other food production vessels reduce heating and cooling times, significantly improve mixing performance, and enhance operator and food safety.

(A) Additional Jacket Surface Area increases total heat transfer area to significantly reduce heat-up and cool-down times. Highly efficient Uniflow coil design can be zoned to apply heating and/or cooling to the upper half of the kettle, or turned off when cooking smaller batches in a larger kettle.

(B) Double-Motion Agitation, with counter-rotating inner and outer agitators, reduces mixing and heating/cooling times and produces a better, more consistent mix.

(C) Increased Motor Horsepower and Heavy Duty Mixer Drive improve long-term reliability and provide processing capacity to a range of higher viscosities.

Operator Safety Enhancements, such as **(D) jacket insulation,** cover lift assist, **(E) limit switches, grate cutoff switches** and **(F) variable-frequency drive controllers** can assist in preventing injuries during kettle operation.

Food Safety Enhancements, such as highly polished kettle interior finishes and special scraper blades to optimize **(G) Clean-In-Place (CIP)** and pipeline metal detection systems, significantly reduce food contamination.

Process Engineering Support and Testing Can Help You Make the Right Decisions

Decisions on how to best meet your food processing expansion requirements must be based on careful evaluation of your product, your process and your production goals. Your kettle manufacturer can be an important participant in this process, as those with a strong design engineering focus have valuable experience and processing expertise that can help you maximize your opportunities and avoid risks to safety, quality or production as you scale operations.

Some kettle manufacturers even provide product batch-testing opportunities in an on-site testing lab, where you can run test batches using kettles featuring the same enhanced mixing and cooking specifications as the design you are considering. This can go a long way toward ensuring your final kettle, tank or other cooking vessel is optimized for your situation.

The design, configuration and construction of your cooking vessel are among the most important elements of your food processing operation. By keeping these guidelines in mind, you will be well prepared to succeed in your expansion.

Optimizing Safety:

KETTLE MODIFICATIONS TO ENHANCE OPERATOR AND FOOD SAFETY IN YOUR PROCESS

Safety, quality and production are every food processor's major goals, but the most important of these is safety. Without safety — both for your plant's production team, and for the consumers who use your company's food products — there is little point to achieving quality and production goals, when compared to the downside consequences of unsafe equipment operations or the even greater liability risk of defective products. This is why nearly every food processing company makes safety the most important part of every aspect of their operations, and why you must carefully consider the range of safety features available when specifying and configuring your new kettle.

Operator Safety During Operation

Your first safety consideration is for your production team. Consider the ergonomics of your process and its impact on operator safety during every batch process:

Power assist for ingredient loading and filling: How heavy are the loads for the individual ingredients in your batch? How high must they be lifted by operators? Often, power-assisted loaders and automatic fillers are used to prevent fatigue and injury to operators when loading batch ingredients.

Hinge cover lift assists, cover grates, motor cutoff safety switches and variable-frequency drives: Another important point to consider is the number of times your plant operators must open and close the kettle lid during a typical batch process, and what operations they need to perform during these steps. Important equipment features are available to prevent operator accidents and injuries when operators must open the kettle lid during a batch process while the kettle mixer or agitator is in motion:

- **A spring- (or air-) operated cover lift assist** allows for easy opening and closing of heavy kettle lids to enable operators to access the batch before, during or after processing; and, this feature also prevents operator injuries from the kettle lid falling back down unexpectedly onto the top of the kettle.

- **A grate positioned under the cover** allows for visual inspection of the batch during the mixing and cooking process, and also allow operators to safely add ingredients to the batch while the agitator is operating. Grate openings on grates can be custom sized to allow only ingredients to pass through the grate, but prevent hands and arms from entering the kettle.

- **Motor cutoff safety switches** automatically turn the agitator motor off if the cover or grate is lifted from the top of the kettle. This should be added to the kettle specification to prevent injuries during operation.

- **A variable frequency drive (VFD)** can also be specified for use with the kettle motor, featuring an automatic cutoff that is activated when obstructions or heavy motor loads cause amperage spikes in the motor.

Kettle jacket insulation:
During the cooking process, the outside of the kettle jacket can become dangerously hot for operators working around the vessel. Many kettles feature jacket insulation, which reduces the outside temperature of the kettle to a safe level, and significantly reduces burn risk to operators. By reducing heat loss, jacket insulation also improves cooking efficiency and reduces the ambient room temperature on the plant floor.

Ball valve handle extension or pneumatic actuation operation:
Extension handles can be installed on sanitary ball valves to prevent operators from having to bend down or move underneath the kettle to discharge the kettle at the end of the process. Pneumatically actuated sanitary ball valves can also be used to provide for remote valve operation and even greater safety.

Food Safety During Operation

Assuring a product which is always both sanitary and free of contaminants is another critically important goal of a safe food process. Focus closely on these safety features when you are involved in the design and configuration stages of your next kettle purchase:

Sanitary features for optimizing clean-in-place (CIP) systems:
Important design features and fabrication techniques can be integrated into new kettles to optimize the use of CIP systems. For example, higher-grade surface finishes can be used on the internal areas and all other food contact surfaces of the vessel to increase CIP cleaning efficiency. Also, weld joints, seams and other food contact surfaces that are welded, ground and polished will create smooth, sanitary and easily cleanable surfaces.

Design features to eliminate the potential for standing water collection:
Several design features can eliminate the risk of water collection on the outside of the kettle:

- **Channel risers** can be used to slope the channel bridge on the kettle's top motor mount to move water away from the top of the vessel.

- **Kettle covers** can be sloped to allow water or other fluids to run off the top of the cover.

- **Kettle legs** and support hardware can be made from round stock instead of flat bars to prevent water collection.

Pipeline metal detection enhancements:
Scraper blades, impregnated with stainless steel powder, can also be used to enable visibility on pipeline metal detection systems, to prevent foreign object contamination of food products during processing.

About Lee Industries

The mission of Lee Industries is to assure our customers are successful by focusing on their custom processing needs and providing them with the highest quality, most durable products and services available.

Lee Industries is committed to the success of your company by providing you with world-class, high-quality stainless alloy process equipment and service. We design and manufacture the most technologically advanced equipment in the industry. Our customer service team, backed by over 80 years of innovation and experience, provides Lee clients with a single source for all their processing system needs.

LEE INDUSTRIES
Processing Perfection.™

P.O. Box 688 | Philipsburg, PA 16866
P. (814) 342-0461 | F. (814) 342-5660
www.leeind.com